Electrolux PROFESSIONAL

Handling System for Hood type Dishwasher Table Unloading/ Loading, 800mm

ITEM #

MODEL #

NAME #

SIS #

AIA #

865263 (BHHLU08) Dishwasher table, loading and unloading, 800mm

Short Form Specification

Item No.

For hood type dishwashers. Constructed in 304 AISI stainless steel. N.2 square 40x40mm square legs on height-adjustable feet. Basket direction: from right to left and from left to right.

APPROVAL:

Main Features

- Supplied knocked-down and easy to assemble.
- Designed for 500x500 mm dishwashing racks.
- Connection to dishwasher possible on the left, front or right side.

Construction

- Stainless steel feet 50 mm adjustable in height to ensure that tables drain back into the dishwasher.
- All surfaces smooth with polished finish.
- 40x40 mm square tubular legs in AISI 304 stainless steel.
- Deep anti-drip profiles completely folded with lower edge for safe and easy cleaning.
- 304 AISI stainless steel construction throughout.
- To be secured to the dishwasher and fitted with one pair of legs at the other end.

Optional Accessories

- Undershelf for Dishwasher table, 800mm PNC 865351 ❑

Handling System for Hood type Dishwasher Table Unloading/ Loading, 800mm

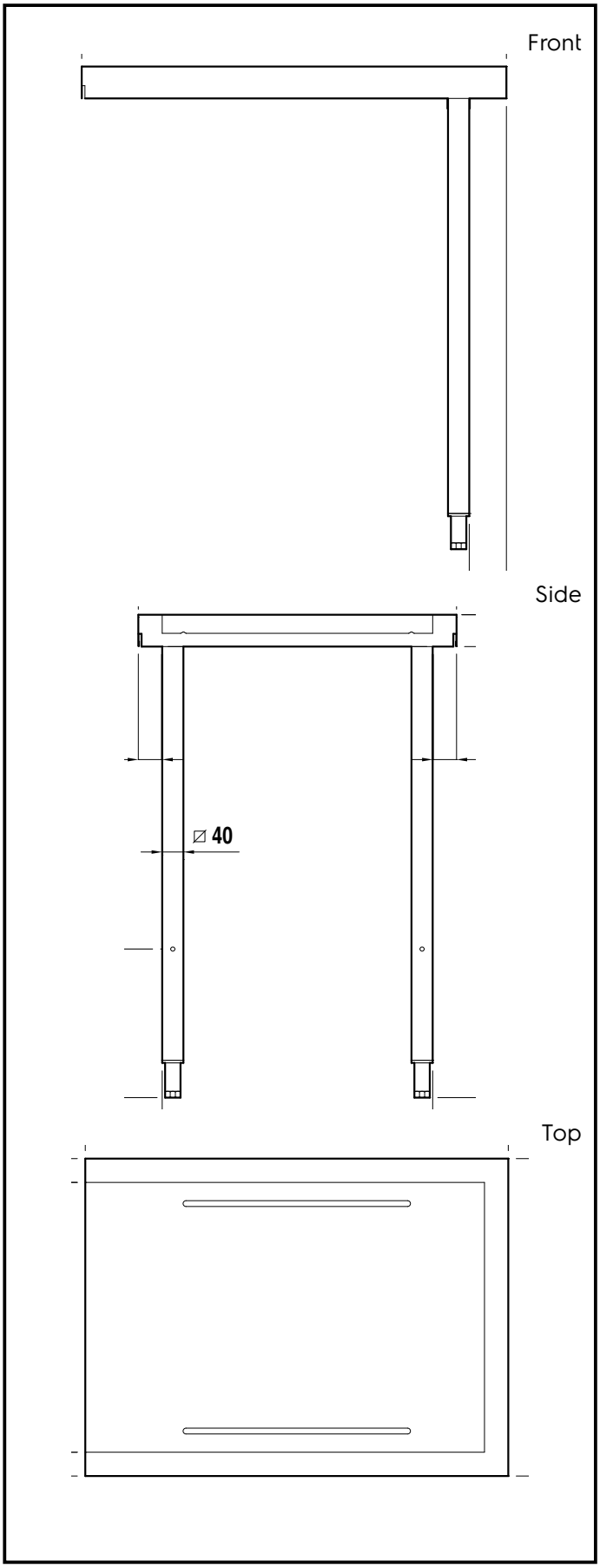

Key Information:

External dimensions, Width:	
865263 (BHHLU08)	800 mm
External dimensions, Depth:	600 mm
External dimensions, Height:	910 mm
Net weight:	6 kg

The company reserves the right to make modifications to the products without prior notice. All information correct at time of printing.